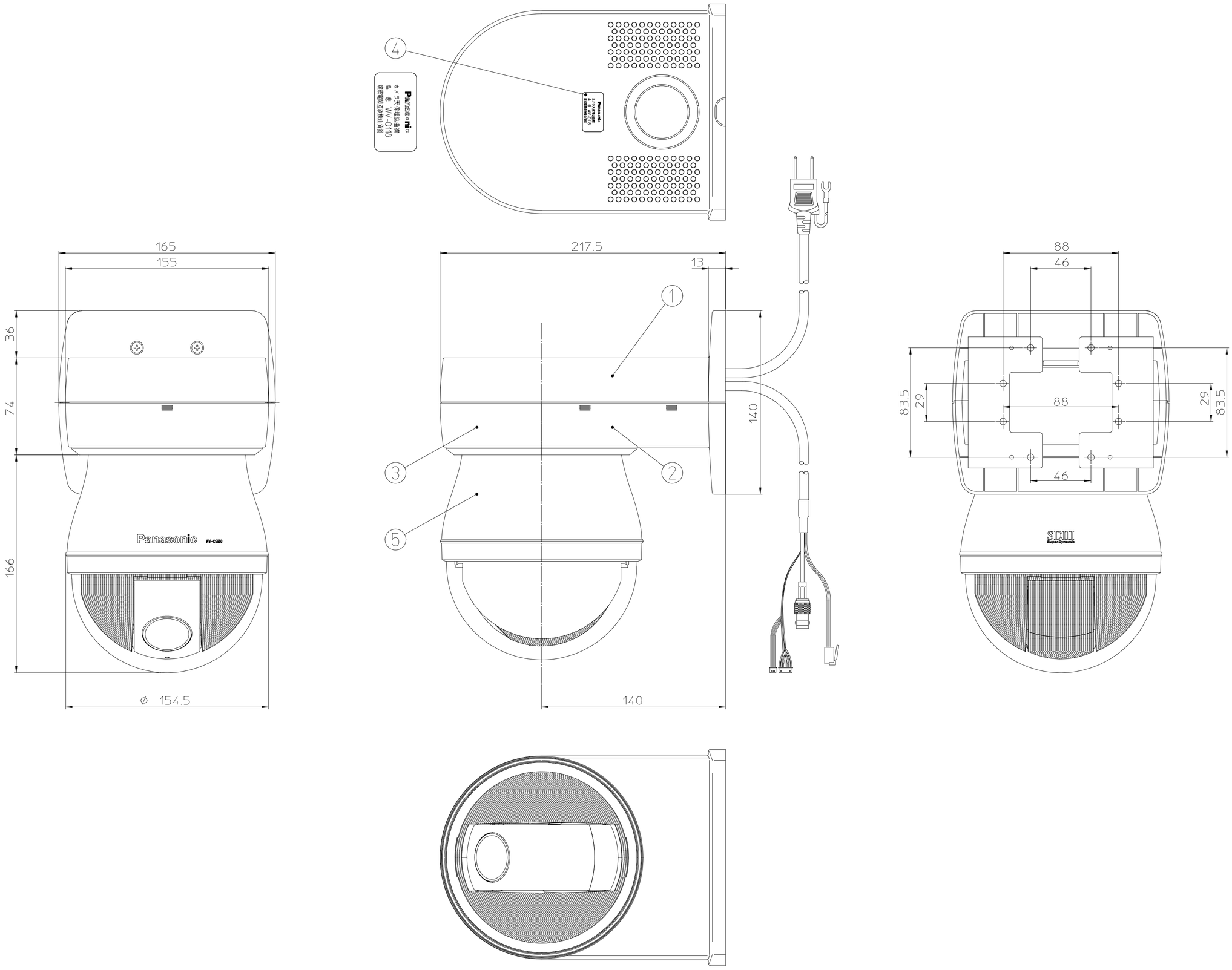

4
165
155
36
74
166
Panasonic
ø 154.5
217.5
13
1
2
3
5
140
140
88
46
83.5
29
88
29
83.5
46
SDIII